MBM || MAB

Produktkatalog

RWA beslag sæt

Oktober 2020

OVERVIEW OF RWA HARDWARE SYSTEMS

RWA hardware system	Rated voltage	Locking drive			Opening drives	Accessories			Casement dimensions						Required mounting space	Use			Location		
		Type	Number of VP	Lenght		Control modules Accessories	Frame bracket	Casement bracket	Bottom-/top-hung			Side-hung				Natural ventilation	RWA	NSHEV	Facade		Roof
									FAB	FAH	max. weight	FAB	FAH	max. weight					inward	outward	
	[VDC]			[mm]		[A]			[mm]	[mm]	[Kg]	[mm]	[mm]	[Kg]	[mm]						
1000	24	FV3	1 (*1	450	PL6	(B20-1)	K15	F11	500 – 1200	600 – 1500	50	600 – 1500	500 – 2400	90	40	●	●	●	●	■	■
					PL10						90			150		●	●	●	●	■	■
		OFV (*3	(*2		PL6						50	500 – 1500		90		●	●	●	●	■	■
					PL10						90			150		●	●	●	●	■	■
1000-TE	24	FV1	2; 3	1200	2x PL6	USKM	2x K15	2x F11	1250 – 2400	600 – 2000	90	600 – 1500	1250 – 2400	130	40	●	●	●	●	■	■
					2x PL10						160			200		●	●	●	●	■	■
			3	2000	2x PL6	USKM			2050 – 2400		90		2050 – 2400	130		●	●	●	●	■	■
					2x PL10						160			200		●	●	●	●	■	■
		OFV (*4	(*2		2x PL6	USKM			500 – 1200	600 – 1500	50	500 – 1500	500 – 2400	90		●	●	●	●	■	■
					2x PL10						90			150		●	●	●	●	■	■
1100	24	FV3 (*3 (*2	1 (*1	450	PL6	B21-1	K15 (K37)	F11	500 – 1200	800 – 1600	70	600 – 1500	500 – 2400	90	40	●	●	●	■	●	■
					PL10						120			150		●	●	●	■	●	■
1100-TE	24	FV1 (*4 (*2	2; 3	1200	2x PL6	USKM (B20-2)	2x K15 (2x K37)	2x F11	1250 – 2400	800 – 2000	130	600 – 1500	1250 – 2400	130	40	●	●	●	■	●	■
					2x PL10						200			200		●	●	●	■	●	■
			3	2000	2x PL6	USKM (B20-3)			2050 – 2400		130		2050 – 2400	130		●	●	●	■	●	■
					2x PL10						200			200		●	●	●	■	●	■
1050	24	FV3 (*3 (*2			PL6		K97 (re/li)	F11				550 – 1250	500 – 1500	90	20	●	●	●	●	■	■
					PL10									130		●	●	●	●	■	■
		OFV (*3	(*2		PL6									90		●	●	●	●	■	■
					PL10									130		●	●	●	●	■	■
1050-TE	24	FV1	(*1		2x PL6	USKM	K97 re+li	2x F11				550 – 1500	500 – 2400	130	20	●	●	●	●	■	■
					2x PL10									150		●	●	●	●	■	■
		OFV (*4	(*2		2x PL6	USKM								130		●	●	●	●	■	■
					2x PL10									150		●	●	●	●	■	■

LEGEND

● suitable ■ not recommended

(*1 On the main closing edge of side -hung windows use of FV with 2 or 3 locking points (VP) is possible
(*2 Window specific multi-locking system
(*3 Use of FVR3 / FVB3 possible
(*4 Use of FVR4 / FVB4 possible

RWA 1000

RWA 1000

▪ Model	24 V DC
▪ Application	Bottom-/Top-/Side-hung inward opening windows
▪ Opening drives	PL6 S1 (600 N) / PL10 S1 (1000 N)
	on the side closing edeg (NSK)
▪ Locking drives	FV3 / OFV / FVR3 / FVB3 / (FV1 with USKM)
	on the main closing edge (HSK)
▪ Frame brackets	K15 (H = 150 mm), B20 für FV3 (FM)
▪ Casement brackets	F11
▪ Version	Opening drives SOLO / TE = Tandem (with USKM)
▪ Protection rating	IP32

RWA 1100

RWA 1100

▪ Model	24 V DC
▪ Application	Bottom-/Top-/Side-hung ourward opening windows
▪ Opening drives	PL6 S1 (600 N) / PL10 S1 (1000 N)
	on the side closing edeg (NSK)
▪ Locking drives	FV3 / FVR3 / (FV1 with USKM)
	on the main closing edge (HSK)
▪ Frame brackets	K15 (H = 150 mm) / K37 (H = 250 mm) / B20
▪ Casement brackets	F11
▪ Version	Opening drives SOLO / TE = Tandem (with USKM)
▪ Protection rating	IP32

RWA 1050

RWA 1050

▪ Model	24 V DC
▪ Application	Side-hung inward opening windows
▪ Opening drives	PL6 S1 (600 N) / PL10 S1 (1000 N)
	on the side closing edeg (NSK)
▪ Locking drives	FV3 / OFV / (FV1 with USKM)
	on the main closing edge (HSK)
▪ Frame brackets	K97 right hand / left hand
▪ Casement brackets	F11
▪ Version	Opening drives SOLO / TE = Tandem (with USKM)
▪ Protection rating	IP32

OVERVIEW OF SPINDLE DRIVES

Opening drives	Version		Stroke	Force		Speed		Stroke in	Cut-off current	Use			Location		Function		
	Cut-off switch	Rated voltage	up – to	Pulling force	Pushing force	OPEN	ZU	60 s	Max.	Natural ventilation	SHEV	NSHEV	Facade	Roof	Run monitoring	Synchronised run	Sequence control
		[VDC]	[mm]	[N]	[N]			[mm]	[A]								
PL6	S1	24	100 – 300	600	600	5,8	5,8	350	0,8	●	●	●	●		○		○
PL10	S1	24	100 – 300	1000	1000	2,6	2,6	150	0,8	●	●	●	●		○		○

OVERVIEW OF LOCKING DRIVES

Locking drives	Locking stroke (Rotating angle)	Rated voltage	Force (Torque)		Runtime	Close circuit current	Opening drives		Use			Location		Functions		
			Pulling/Pushing force	Initial force (torque)			Model	Cut-off current	Natural ventilation	SHEV	NSHEV	Facade	Roof	Run monitoring	Synchronised run	Sequence control
	[mm]	[VDC]	[N]	[N]	[s]	[A]		[A]								
FV1		24	600	1000	5,0	0,3	○	○	●	●	●	●				○
FV3		24	600	1000	5,0	0,3	S1	0,8	●	●	●	●				●
FVR3	18	24	600	1000	5,0	0,3	S1	0,8	●	●	●	●				●
FVB3	16/22	24	600	1000	5,0	0,3	S1	0,8	●	●	●	●				●
OFV	90° – 180°	24	10 Nm	22 Nm	4,5/9,0	0,3	S1	0,9 – 3,0	●	●	●	●				●

LEGEND

● suitable ■ not recommended

S1 without internal cut-off switch for operation with RWA1000-, RWA1100-, RWA1050-systems

○ only with external cut-off switch or control module USKM

aumüller

TYPICAL APPLICATION

RWA1000 – inward opening

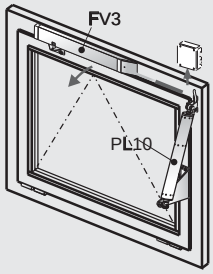

View on bottom-hung window

RWA1000 – inward opening

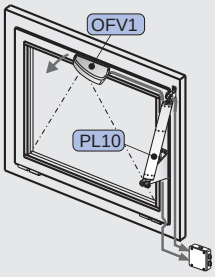

View on bottom-hung window

RWA1000 TE – inward opening

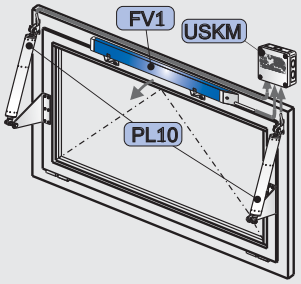

View on bottom-hung window

RWA1000 – inward opening

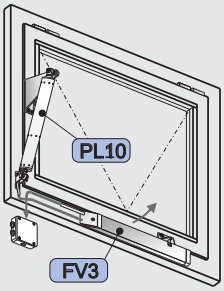

View on top-hung window

RWA1000 – inward opening

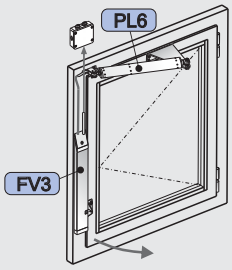

View on side-hung window

RWA1100 – outward opening

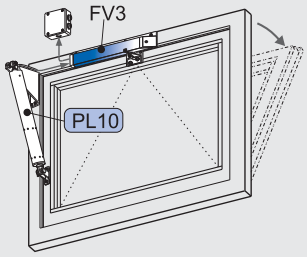

View on bottom-hung window

RWA1100 – outward opening

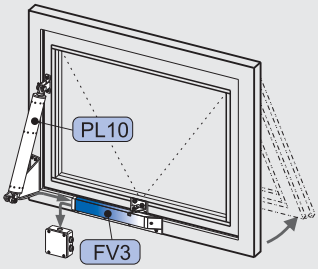

View on top-hung window

RWA1100 TE – outward opening

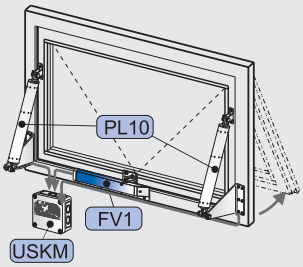

View on top-hung window

RWA1100 – outward opening

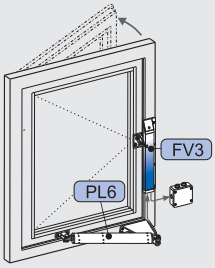

View on side-hung window

RWA1050 – inward opening

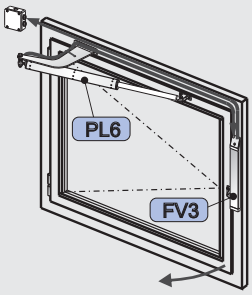

View on side-hung window

RWA1050 TE – inward opening

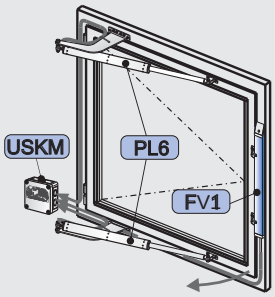

View on side-hung window

RWA1050 TE – inward opening

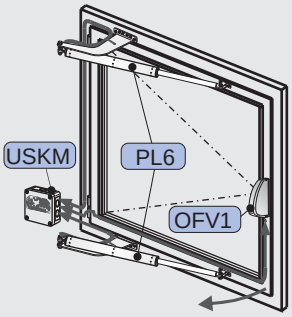

View on side-hung window

- Application: natural ventilation, SHEV, ferralux®-NSHEV
- Force: PL6 = 600 N / PL10 = 1000 N
- Without internal cutt-off switch – external cutt-off switch required! (control module USKM or locking drive FV3 / FVR3 / FVB3 / OFV1)

Options

- Rear eye bolt, spindel tube with interior thread for clevis

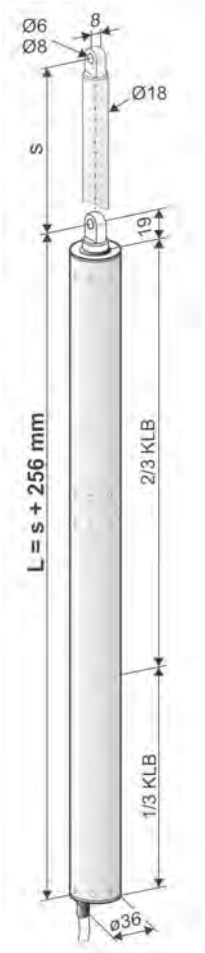

TECHNICAL DATA

U_N	Rated voltage	24V DC (± 20%), max. 2 Vpp
I_N	Rated current	0,6 A
I_A	Cut-off current	0,8 A
P_N	Rated power	15 W
ED	Duty cycle	20 % (ON: 2 min. / OFF: 8 min.)
	Protection rating	IP 65
	Ambient temperature range	-5 °C ... +75 °C
F_Z	Pulling force max.	PL6 = 600 N PL10 = 1000 N
F_A	Pushing force	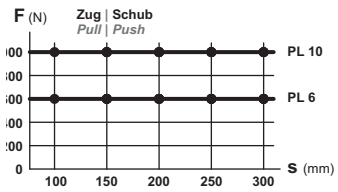
F_H	Pullout force	5000 N (fastening depended)
	Spindle tube	stainless steel
	Connecting cable	non-halogen, grey 2 x 0,75 mm², ~ 3 m
v	Speed	PL6 ↑ 5,8 mm/s ↓ 5,8 mm/s PL10 ↑ 2,6 mm/s ↓ 2,6 mm/s
s	Stroke	100 – 300 mm (± 5%)
L	Length	s + 256 mm see order data
	Sound pressure level A	≤ 70 dB (A)

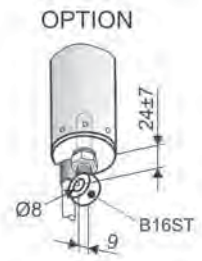

ORDER DATA

s [mm]	L [mm]	Version	Finish	PU/pcs.	Part.-No.
100	356	PL6 100 S1	E6/C-0	1	**562010**
		PL10 100 S1		1	**565010**
150	406	PL6 150 S1	E6/C-0	1	**562015**
		PL10 150 S1		1	**565015**
200	456	PL6 200 S1	E6/C-0	1	**562020**
		PL10 200 S1		1	**565020**
250	506	PL6 250 S1	E6/C-0	1	**562025**
		PL10 250 S1		1	**565025**
300	556	PL6 300 S1	E6/C-0	1	**562030**
		PL10 300 S1		1	**565030**

OPTIONS

Special model	PU/pcs.	Part.-No.
Front suspension		
Pushing rod end with interior thread M8	1	**515061**
Pushing rod end with interior thread M10	1	**515060**
Drive housing painted/powder coated in other RAL colours		
Lump sum for coating		**516030**
Specify at order stage:	1 – 20	**516004**
	21 – 50	**516004**
	51 – 100	**516004**
	up 101	**516004**
Extra length connecting cable:		
5 m – non-halogen, grey – 2 x 0,75 mm²		**501024**
10 m – non-halogen, grey – 2 x 0,75 mm²		**501026**

Accessories for fron / rear suspension	PU/pcs.	Part.-No.
Rear Suspension		
B16ST Eyebolt Ø8 mm, galvanized	1	**100044**
B16VA Eyebolt Ø8 mm, stainless steel	1	**100144**
B27ST clevis M8x16 mm, galvanized, Grubscrew M8x45 mm	1	**105510**
External cutt-off switch		
Control module USKM (up to max. s 300 mm)	1	**512140**

FRAME BRACKETS

F11ST	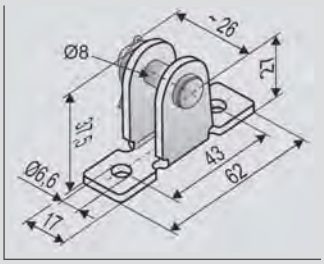	**Application** **Surface mounting** on the **side closing edge** of casement/window frame profiles of in-/outward opening windows or on skylights, for drives with **front or rear suspension** with bore **Ø8 mm**, mounting holes aligned with central axis of drive	**Part.-No. 151400** **Material/Finish** steel galvanized **Feature/Equipment** 1x bolt Ø8 mm, washer, cotter pin **Load** max. 3000 N			
F11VA			**Part.-No. 151401** **Material/Finish** stainless steel			
F13	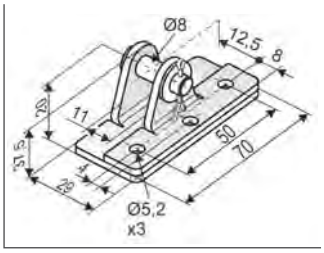	**Application** **Surface mounting** on the **side closing edge** of casement/window frame profiles of in-/outward opening windows or on skylights, for drives with **front or rear suspension** with bore **Ø8 mm**, mounting holes not alignet with the central axis of drive	**Part.-No. 151405** **Material/Finish** steel galvanized **Feature/Equipment** 1x bolt Ø8 mm, washer, cotter pin **Load** max. 1600 N			

CASEMENT BRACKETS

K15

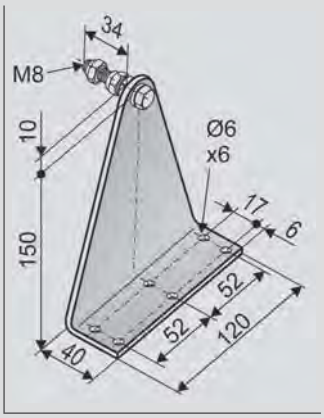

Application

Surface mounting on the **side closing edge** of window frame profiles of in-/outward opening windows, by obliquely arranged drives with **rear suspension** with bore **Ø8 mm.**
Required space on the frame **40 mm**

Part.-No. 307000

Material/Finish
steel galvanized
Feature/Equipment
H=150 mm, t=4 mm

Optional accessories

B16ST Eyebolt (Ø8 x 40 mm ST) — **Part.-No. 100044**

B16VA Eyebolt (Ø8 x 40 mm VA) — **Part.-No. 100144**

K15-Set

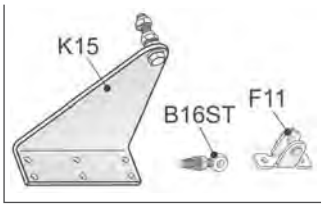

Application

Surface mounting on the **side closing edge** like RWA-1000/1100 hardware sets.
Required space on the frame **40 mm**

Part.-No. 517590

Material/Finish
steel galvanized
Feature/Equipment
Set:
1x K15
1x F11ST
1x B16ST

K16

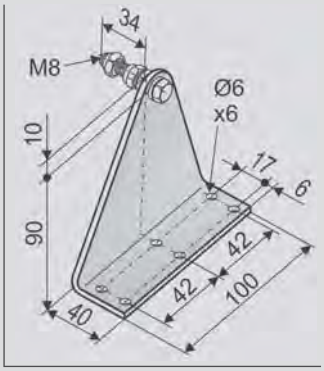

Application

Surface mounting on the **side closing edge** of window frame profiles of in-/outward opening windows, by obliquely arranged drives with **rear suspension** with bore **Ø8 mm.**
Required space on the frame 40 mm

Part.-No. 307200

Material/Finish
steel galvanized
Feature/Equipment
H=90 mm, t=4 mm

Optional accessories

B16ST Eyebolt (Ø8 x 40 mm ST) — **Part.-No. 100044**

B16VA Eyebolt (Ø8 x 40 mm VA) — **Part.-No. 100144**

K37

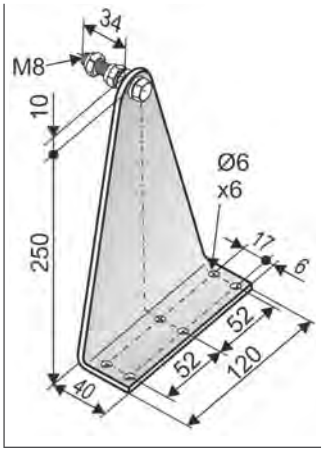

Application

Surface mounting on the **side closing edge** of window frame profiles of in-/outward opening windows, by obliquely arranged drives with rear suspension with bore **D = 8 mm.**
Required space on the frame **40 mm**

Part.-No. 307500

Material/Finish
steel galvanized
Feature/Equipment
H=250 mm, t=5 mm

Optional accessories

B16ST Eyebolt (Ø8 x 40 mm ST) — **Part.-No. 100044**

B16VA Eyebolt (Ø8 x 40 mm VA) — **Part.-No. 100144**

CASEMENT BRACKETS

K97L	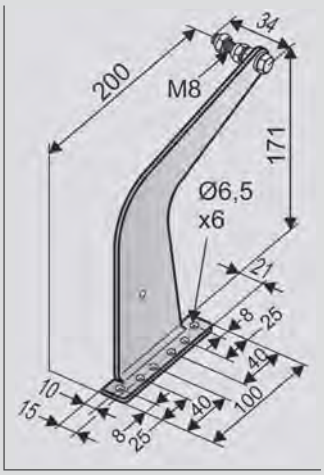	**Application** **Surface mounting** on the **side closing edge** of window frame profiles of inward opening side hung windows, by obliquely arranged drives with **rear suspension** with bore **Ø8 mm. Required space on the frame 20 mm**	**Part.-No. 160938** **Material/Finish** stainless steel, vibratory grinding **Feature/Equipment** left hand		
		Optional accessories			
		B16ST Eyebolt (Ø8 x 40 mm ST)	**Part.-No. 100044**		
		B16VA Eye bolt (Ø8 x 40 mm VA)	**Part.-No. 100144**		
K97R	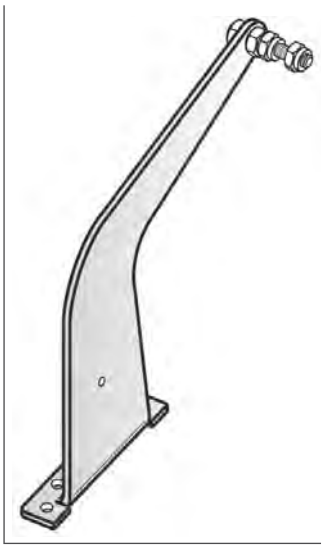	**Application** **Surface mounting** on the **side closing edge** of window frame profiles of inward opening side hung windows, by obliquely arranged drives with **rear suspension with** bore **Ø8 mm. Required space on the frame 20 mm**	**Part.-No. 160939** **Material/Finish** stainless steel, vibratory grinding **Feature/Equipment** right hand		
		Accessories			
		B16ST Eyebolt (Ø 8 x 40 mm ST)	**Part.-No. 100044**		
		B16VA Eyebolt (Ø 8 x 40 mm VA)	**Part.-No. 100144**		
K1050-L	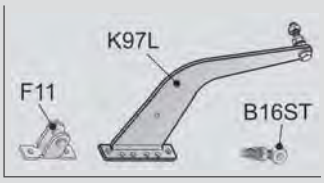	**Application** **Surface mounting** of drives on the **side closing edge** like RWA-1050 hardware system	**Part.-No. 307050** **Feature/Equipment** Set: 1x K97L 1x F11 1x B16ST		
K1050-R	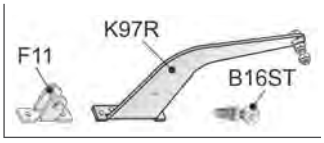	**Application** **Surface mounting** of drives on the **side closing edge** like RWA-1050 hardware system	**Part.-No. 307051** **Feature/Equipment** Set: 1x K97R 1x F11 1x B16ST		

aumüller

ACCESSORIES

B16ST	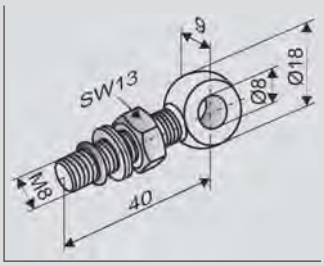	**Application** Rear or front suspension of spindle drives with **M8** thread in the rear base pice or in the spindle tube	**Part.-No. 100044** **Material/Finish** steel, galvanized **Feature/Equipment** M8x40 (Eye Ø8 mm), 1x nut M8 + Nordlock-safety-washer + o-ring max. screw-in depth in the drive 25 mm			
B16VA			**Part.-No. 100144** **Material/Finish** stainless steel (V2A)			
B27ST	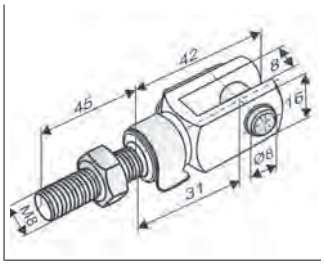	**Application** Rear or front suspension of spindle drives with **M8** thread in the rear base cap or in the spindle tube	**Part.-No. 105510** **Material/Finish** steel, galvanized **Feature/Equipment** Clevis M10 x 40 mm with spring bolt Ø8 mm and thread M8 x 45 mm 1x nut M10 + Nordlock-safety-washer + O-ring, max. screw-in depth in the drive 25 mm			

SPECIAL FEATURES RWA1000

- For natural ventilation, smoke and heat exhausting and ferralux® NSHEV (EN12101-2)
- Siutable for inwards opening bottom/top/side-hung windows
- Large opening angles relized with short strokes and opening times due to the mounting of the spindle drives at an acute angle to the side closing edge
- Maximum opening angles and balanced force-stroke ratio with K15 mounted on the side closing edge of the casement profile at app. 1/3 of the casemnet lenght related to the hinge side
- Other combinations of various spindle drives in SOLO or TANDEM arrangements with locking actuators for actuating of window profile-specific hardware systems on request

For this product series, a Type III Environmental Product Declaration (EPD) was issued according to ISO 14025 and EN 15804.
The LCA results of the different product types are listed at the end of this product catalogue.
The EPD documents can be viewed or downloaded from our homepage **www.aumueller-gmbh.de**.

MOUNTING DIMENSIONS OF RWA1000 FOR BOTTOM-/TOP-HUNG INWARD OPENING WINDOWS

Hardware set	Frame bracket	Stroke of the opening drive	CASEMENT CLOSED			Mounting dimension „X"	FAH (NSK) (side closing edge)	Opening angle	Opening width	CASEMENT OPEN			Weight of the casement (max.)		Required space on the window frame		FAB (HSK)
			Angle of the drive force application	Applied force at the drive fixing point						Angle of the drive force application	Applied force at the drive fixing point						
				PL6	PL10						PL6	PL10	PL6	PL10	NSK	HSK	
			[DEG]	[N]	[N]	[mm]	[mm]	[DEG]	[mm]	[DEG]	[N]	[N]	[Kg]	[Kg]	[mm]	[mm]	
RWA 1000 (*1	K15	100	19	195	326	200	600	25	260	48	447	745	30	50	40	40	Depends of the used locking drive (*2
							800	17	236	46	430	717	43	72			
						250	750	22	286	47	442	736	29	49			
							1000	15	261	45	426	710	43	71			
						300	900	20	313	47	437	729	29	49			
							1200	13	272	45	422	703	42	70			
		150	16	165	276	225	675	34	395	57	503	838	34	56	40	40	
							900	23	359	52	474	790	47	79			
						275	825	30	427	55	490	817	33	54			
							1100	20	382	51	467	778	47	78			
						325	975	28	472	54	487	811	32	54			
							1300	18	407	50	462	769	46	77			
		200	15	155	259	250	750	42	538	64	541	902	36	60	40	40	
							1000	27	467	57	503	839	50	84			
						300	900	38	586	62	531	885	35	59			
							1200	24	499	56	497	829	50	83			
						350	1050	35	631	61	523	872	35	58			
							1400	22	534	55	491	818	49	82			
						400	1200	32	662	59	516	861	34	57			
							1600	20	556	54	486	810	49	81			
		250	13	135	225	275	825	50	697	71	567	945	38	63	40	40	
							1100	31	588	62	528	880	53	88			
						325	975	45	746	68	557	928	37	62			
							1300	28	629	60	519	865	52	87			
						375	1125	41	788	66	549	915	37	61			
							1500	25	649	59	513	854	51	85			
						425	1275	38	830	65	544	906	36	60			
							1700	23	678	58	507	844	51	84			
		300	12	125	208	300	900	56	845	77	584	973	39	65	40	40	
							1200	35	722	65	544	907	54	91			
						350	1050	51	904	74	576	959	38	64			
							1400	31	748	63	536	893	54	89			
						400	1200	46	938	71	569	948	38	63			
							1600	28	774	62	529	882	53	88			
						450	1350	43	990	69	561	935	37	62			
							1800	26	810	61	523	872	52	87			
						500	1500	40	1026	68	555	925	37	62			
							2000	24	832	60	519	864	52	86			

(*1 For the tandem sets RWA1000TE the drive forces and the max. window weigths will be correspondingly higher
(*2 FV1 – 1x = 450 mm
FV1 – 2x = 1200 oder 2000 mm
FV1 – 3x = 2000 mm

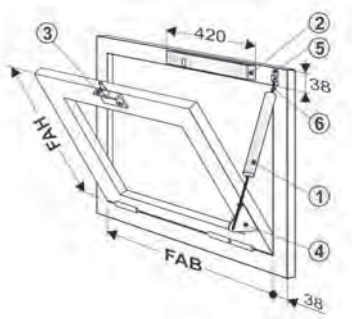

① 1x **PL10 S1**
(100 / 150 / 200 / 300 mm)

② 1x **FV3-R** (1x) L = 420 mm)

③ incl. **B18**

1 x K15-Set:

④ 1x **K15**

⑤ 1x **F11**

⑥ 1x **B16ST** (8x40)

ORDER DATA

	Part.-No.
Components	
1x PL10 S1	
PL10-100 (FAH min. 550 mm)	**565010**
PL10-150 (FAH min. 600 mm)	**565015**
PL10-200 (FAH min. 700 mm)	**565020**
PL10-300 (FAH min. 1000 mm)	**565030**
1x FV3-R L= 420 mm	
FV3-R (1x) FAB min. 450 mm	**515102**
1x Frame bracket set	
K15 Set	**517590**
Special model	
Set painted / powder coated in other RAL colours	**516022**
Optional accessories	
B21-1 base plate FV L = 420; FU>10 mm	**515181**
B22 base plate for B18 glazing bead	**301599**

Installation requirements	
Opening direction	inward
Drive lenght (eye bolt – eye bolt)	280 ± 7 mm + Stroke
Required mounting space FV (on the window frame profile)	min. 38 mm
Required mounting space PL (on the window frame profile)	min. 38 mm
Weight of the casement	max. 30 kg/m²
Width of the casement (FAB)	450 – 1300 mm
Min. height of the casement (FAH)	see mounting dimensions
Rated voltage	24V DC, 2 Vpp
Cut-off current	0,8 A
Rated power	15 W

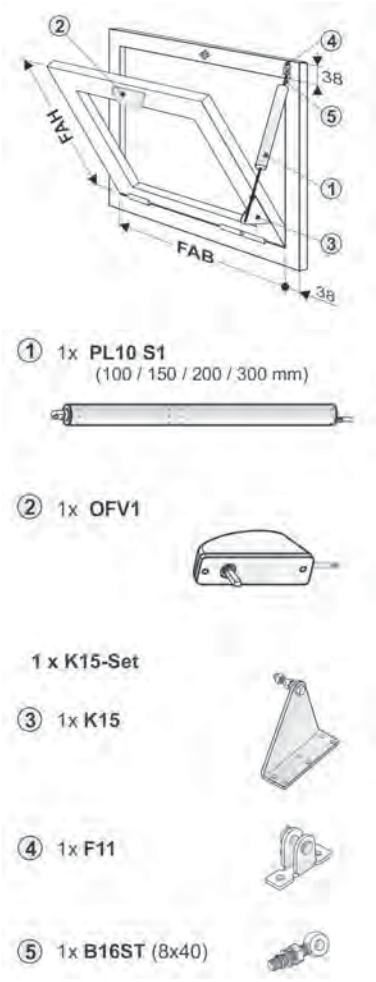

ORDER DATA

	Part.-No.
Components	
1x PL10 S1	
PL10-100 (FAH min. 550 mm)	**565010**
PL10-150 (FAH min. 600 mm)	**565015**
PL10-200 (FAH min. 700 mm)	**565020**
PL10-300 (FAH min. 1000 mm)	**565030**
1x OFV1	
OFV1 (FAB min. 450 mm)	**513850**
1x Frame bracket set	
K15 Set	**517590**

Installation requirements	
Opening direction	inward
Drive lenght (eye bolt – eye bolt)	280 ± 7 mm + Stroke
Required mounting space OFV (on the casemnet profile)	min. 40 mm
Required mounting space PL (on the window frame profile)	min. 38 mm
Weight of the casement	max. 30 kg/m²
Width of the casement (FAB)	450 – 1300 mm
Min. height of the casement (FAH)	see mounting dimensions
Rated voltage	24V DC, 2 Vpp
Cut-off current	1,1 A
Rated power	26 W

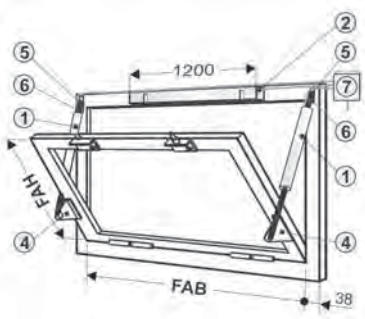

① 2x **PL 10 S1**
(100 / 150 / 200 / 300 mm)

② 1x **FV1** (2x) L= 1200 mm

③ incl. 2x **B18**

2x K15-Set

④ 2x **K15**

⑤ 2x **F11**

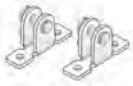

⑥ 2x **B16ST** (8x40)

⑦ 1x **USKM**

ORDER DATA

	Part.-No.
Components	
2x PL10 S1 (price per drive)	
PL10-100 (FAH min. 550 mm)	**565010**
PL10-150 (FAH min. 600 mm)	**565015**
PL10-200 (FAH min. 700 mm)	**565020**
PL10-300 (FAH min. 1000 mm)	**565030**
1x FV1-R L= 1200 mm	
FV1-R (2x) (FAB min. 1200 mm)	**515111**
2x Frame bracket set (price per frame bracket set)	
K15 Set	**517590**
1x Control module	
USKM	**512140**
Special model	
Set painted / powder coated in other RAL colours	**516022**
Optional accessories	
B21-2 base plate FV L = 1200; FU>10 mm	**515183**
B22 base plate for B18 glazing bead	**301599**

Installation requirements	
Opening direction	inward
Drive lenght (eye bolt – eye bolt)	280 ± 7 mm + Stroke
Required mounting space FV (on the window frame profile)	min. 38 mm
Required mounting space PL (on the window frame profile)	min. 38 mm
Weight of the casement	max. 30 kg/m²
Width of the casement (FAB)	1200 – 2500 mm
Min. height of the casement (FAH)	see mounting dimensions
Rated voltage	24V DC, 2 Vpp
Cut-off current	1,6 A
Rated power	30 W

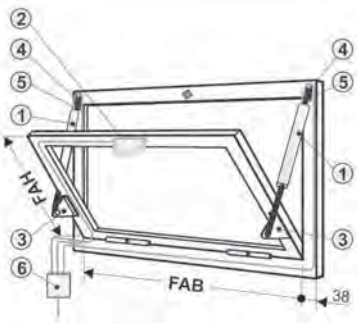

① 2x **PL10 S1**
(100 / 150 / 200 / 300 mm)

② 1x **OFV1**

2 x K15-Set

③ 2x **K15**

④ 2x **F11**

⑤ 2x **B16ST (8x40)**

⑥ 1x **USKM**

ORDER DATA

	Part.-No.			
Components				
2x PL10 S1 (price per drive)				
PL10-100 (FAH min. 550 mm)	**565010**			
PL10-150 (FAH min. 600 mm)	**565015**			
PL10-200 (FAH min. 700 mm)	**565020**			
PL10-300 (FAH min. 1000 mm)	**565030**			
1x OFV1				
OFV1 (FAB min. 450 mm)	**513850**			
2x Frame bracket set (price per frame bracket set)				
K15 Set	**517590**			
1x Control module				
USKM	**512140**			
Special model				
Set painted / powder coated in other RAL colours	**516022**			

Installation requirements	
Opening direction	inward
Drive lenght (eye bolt – eye bolt)	280 ± 7 mm + Stroke
Required mounting space OFV (on the casemnet profile)	min. 40 mm
Required mounting space PL (On the window frame profile)	min. 38 mm
Weight of the casement	max. 30 kg/m²
Width of the casement (FAB)	450 – 1300 mm
Min. height of the casement (FAH)	see mounting dimensions
Rated voltage	24V DC, 2 Vpp
Cut-off current	1,6 A
Rated power	30 W

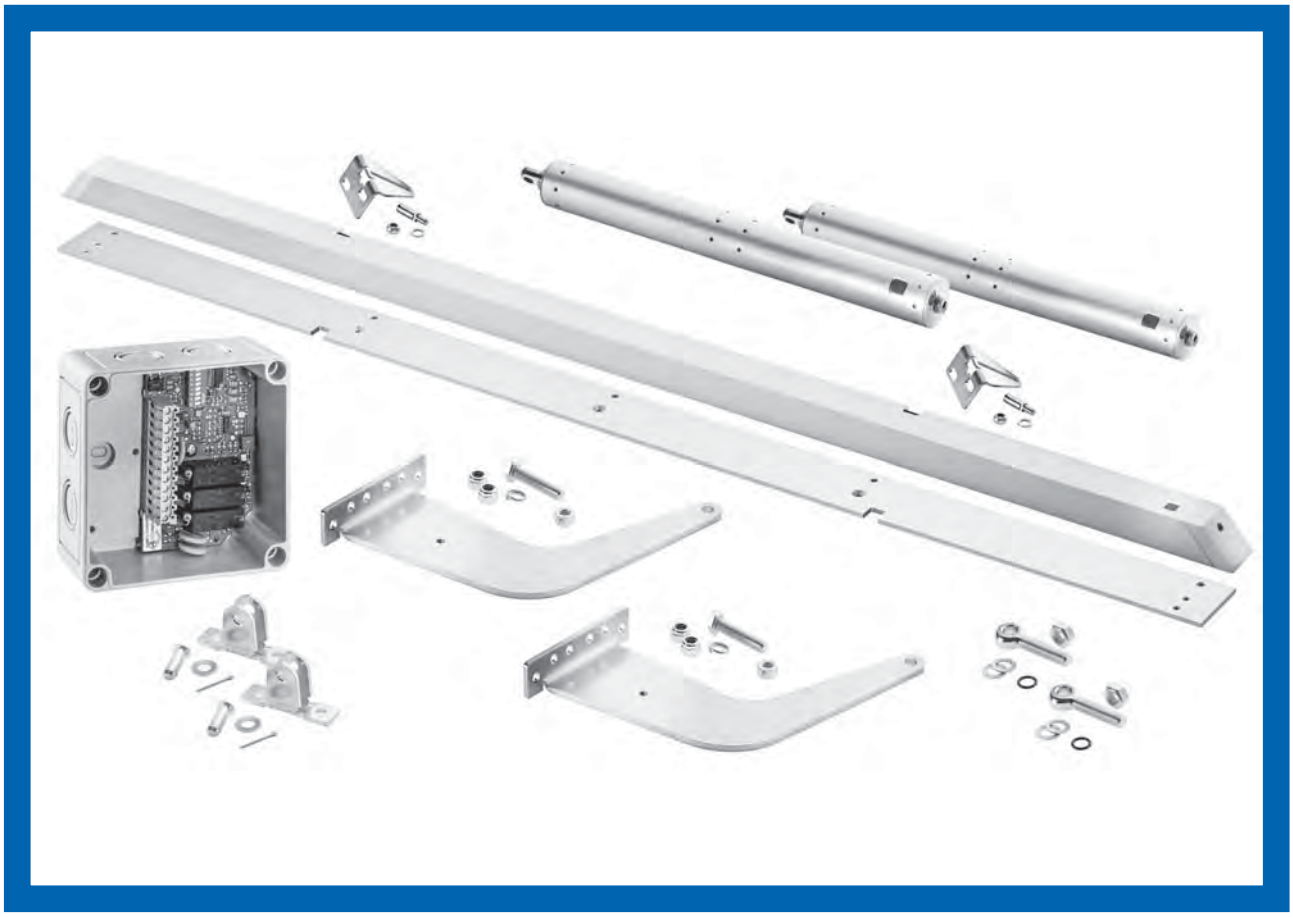

SPECIAL FEATURES RWA1100

- For natural ventilation, smoke and heat exhausting and ferralux® NSHEV (EN12101-2)
- Siutable for outward opening bottom/top/side-hung windows
- Large opening angles relized with short strokes and opening times due to the mounting of the spindle drives at an acute angle to the side closing edge
- Maximum opening angle and balanced force-stroke ratio with casement bracket F11 mounted on the side closing edge of the casement profile at
  - app. 1/2 of the casement lenght if using K15
  - app. 1/3 of the casemnet lenght related to the hinge side if using K37
- Other combinations of various spindle drives in SOLO or TANDEM arrangements with locking actuators for actuating of window profile-specific hardware systems on request
- Use for skylights on request

For this product series, a Type III Environmental Product Declaration (EPD) was issued according to ISO 14025 and EN 15804.
The LCA results of the different product types are listed at the end of this product catalogue.
The EPD documents can be viewed or downloaded from our homepage **www.aumueller-gmbh.de**.

MOUNTING DIMENSION OF RWA1100 FOR BOTTOM-/TOP-HUNG OUTWARD OPENING WINDOWS

Hardware set	Frame bracket	Stroke of the opening drive	CASEMENT CLOSED			Mounting dimension „X"	FAH (NSK) (side closing edge)	Opening angle	Opening width	CASEMENT OPEN			Weight of the casement (max.)		Required spaceon the window frame		FAB (HSK)
			Angle of the drive force application	Applied force at the drive fixing point						Angle of the drive force application	Applied force at the drive fixing point						
				PL6	PL10						PL6	PL10	PL6	PL10	NSK	HSK	
			[DEG]	[N]	[N]	[mm]	[mm]	[DEG]	[mm]	[DEG]	[N]	[N]	[Kg]	[Kg]	[mm]	[mm]	[mm]
RWA 1100 (*1	K15	100	19	194	324	400	800	26	365	67	554	923	55	92	40	40	Depends of the used locking drive (*2
						500	900	23	360	64	537	896	60	100			
						600	1000	18	320	60	519	865	62	104			
		150	17	171	286	450	900	33	516	75	580	966	58	97		40	
						550	1000	28	479	69	559	932	61	103			
						650	1100	24	450	66	549	914	65	108			
						750	1200	21	429	63	536	894	67	112			
		200	15	153	255	500	1000	38	648	79	590	983	59	98	40	40	
						600	1100	32	608	74	577	962	63	105			
						700	1200	28	577	71	566	943	66	110			
						800	1300	25	554	88	600	999	74	123			
						900	1400	22	534	66	546	910	70	117			
		250	13	139	232	550	1100	41	778	82	595	991	60	99	40	40	
						650	1200	36	736	78	586	976	63	106			
						750	1300	31	704	74	576	961	66	111			
						850	1400	28	684	72	571	952	69	116			
						950	1500	25	657	69	559	932	71	118			
						1050	1600	23	638	67	552	921	72	121			
		250	12	127	211	600	1200	44	907	85	598	996	60	100	40	40	
						700	1300	39	861	80	591	985	64	106			
						800	1400	34	828	77	584	973	67	111			
						900	1500	31	799	74	576	960	69	115			
						1000	1600	28	777	72	569	948	71	119			
						1100	1700	26	756	70	563	938	73	121			
						1200	1800	24	742	68	557	928	74	124			
	K37	100	36	352	586	200	600	42	425	94	599	998	40	67	40	40	
						300	700	28	342	80	591	985	51	84			
						400	800	21	296	73	573	955	57	96			
		150	31	312	520	250	650	42	527	97	595	992	46	76	40	40	
						350	750	35	452	85	598	996	56	93			
						450	850	28	407	78	586	976	62	103			
						550	950	23	376	73	573	955	66	111			
		200	28	279	465	300	750	52	659	99	593	988	47	79	40	40	
						400	850	40	583	88	600	999	56	94			
						500	950	24	390	81	593	988	62	104			
						600	1050	28	499	76	583	972	67	111			
						800	1150	24	474	73	573	956	70	116			
		250	25	253	421	350	850	55	786	100	591	984	49	81	40	40	
						450	950	44	712	90	600	1000	57	95			
						550	1050	37	661	84	596	994	62	104			
						650	1150	31	622	79	589	982	67	111			
						750	1250	28	594	76	581	969	70	116			
						850	1350	25	573	73	573	956	72	120			
		300	23	231	384	400	1000	58	962	101	589	982	47	79	40	40	
						500	1100	47	879	92	600	999	55	91			
						600	1200	40	821	86	598	997	60	100			
						700	1300	35	775	81	593	988	64	106			
						800	1400	31	741	78	587	978	67	112			
						900	1500	28	713	75	580	967	70	116			
						1000	1600	25	693	73	574	957	72	120			

(*1 For the tandem sets RWA1100TE the drive forces and the max. window weigths will be correspondingly higher. At outward opening windows the opening drives force axis needs to pass the hinge axis on its outward side with min. 25 mm. The above indicated mounting dimensions are valid for profile depths <75 mm.

(*2 FV1 – 1x = 450 mm
FV1 – 2x = 1200 oder 2000 mm
FV1 – 3x = 2000 mm

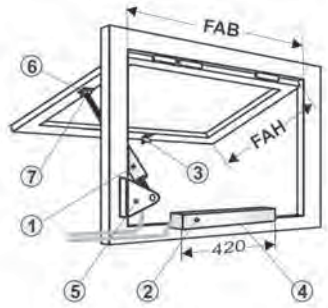

① 1x **PL10 S1** (100 / 150 / 200 / 300 mm)

② 1x **FV3-R** (1x) L = 420 mm)

③ incl. **B18**

④ 1x **B20-1** (420 mm)

1 x K15-Set

⑤ 1x **K15**

⑥ 1x **F11**

⑦ 1x **B16ST** (8x40)

ORDER DATA

	Part.-No.
Components	
1x PL10 S1	
PL10-100 (FAH min. 550 mm)	**565010**
PL10-150 (FAH min. 600 mm)	**565015**
PL10-200 (FAH min. 700 mm)	**565020**
PL10-300 (FAH min. 1000 mm)	**565030**
1x FV3-R L= 420 mm	
FV3-R (1x) (FAB min. 450 mm)	**515102**
1x Mounting plate	
B20-1 L = 420 mm	**515191**
1x Frame bracket set	
K15 Set	**517590**
Optional 1x	
1x K37	**307500**
1x F11	**151400**
1x B16ST	**100044**
Special model	
Set painted / powder coated in other RAL colours	**516022**
Optional accessories	
B22 base plate for B18 glazing bead	**301599**

Installation requirements	
Opening direction	outward
Drive lenght (eye bolt – eye bolt)	280 ± 7 mm + Stroke
Required mounting space FV (on the window frame profile)	min. 38 mm
Required mounting space PL (on the window frame profile)	min. 38 mm
Weight of the casement	max. 30 kg/m²
Width of the casement (FAB)	450 – 1300 mm
Min. height of the casement (FAH)	see mounting dimensions
Rated voltage	24V DC, 2 Vpp
Cut-off current	0,8 A
Rated power	15 W

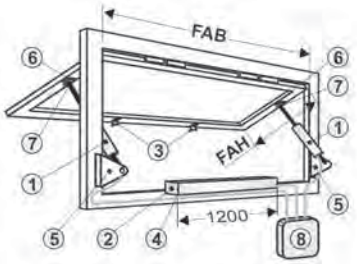

① 2x **PL10 S1**
(100 / 150 / 200 / 300 mm)

② 1x **FV1** (2x) L = 1200 mm

③ incl. 2x **B18**

④ 1x **B20-2** (1200 mm)

2 x K15-Set

⑤ 2x **K15**

⑥ 2x **F11**

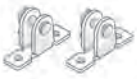

⑦ 2x **B16ST** (8x40)

⑧ 1x **USKM**

ORDER DATA

	Part.-No.			
Components				
2x PL10 S1 (price per drive)				
PL10-100 (FAH min. 550 mm)	**565010**			
PL10-150 (FAH min. 600 mm)	**565015**			
PL10-200 (FAH min. 700 mm)	**565020**			
PL10-300 (FAH min. 1000 mm)	**565030**			
1x FV1-R L = 1200 mm				
FV1-R (2x) (FAB min. 1200 mm)	**515111**			
1x Mounting plate				
B20-2 L = 1200 mm	**515193**			
2x Frame bracket set (price per frame bracket set)				
K15 Set	**517590**			
Optional 2x				
K37	**307500**			
F11	**151400**			
B16ST	**100044**			
1x Control module				
USKM	**512140**			
Special model				
Set painted / powder coated in other RAL colours	**516022**			
Optional accessories				
B22 base plate for B18 glazing bead	**301599**			

Installation requirements	
Opening direction	outward
Drive lenght (eye bolt – eye bolt)	280 ± 7 mm + Stroke
Required mounting space FV (on the window frame profile)	min. 40 mm
Required mounting space PL (on the window frame profile)	min. 38 mm
Weight of the casement	max. 30 kg/m²
Width of the casement (FAB)	1200 – 2500 mm
Min. height of the casement (FAH)	see mounting dimensions
Rated voltage	24V DC, 2 Vpp
Cut-off current	1,6 A
Rated power	30 W

SPECIAL FEATURES RWA1050

- For natural ventilation, smoke and heat exhausting and ferralux® NSHEV (EN12101-2)
- Siutable for inward opening side-hung windows
- Opening angles of 90° relized with short strokes and opening times due to the mounting of the spindle drives at an acute angle to the side closing edge and due to the displacement of the pivoted point of the frame bracket behind the mullion/transom construction
- Required space of only 22 mm for the mounting of the frame bracket on the side closing edge of the window frame profile
- Other combinations of various spindle drives in SOLO or TANDEM arrangements with locking actuators for actuating of window profile-specific hardware systems on request

For this product series, a Type III Environmental Product Declaration (EPD) was issued according to ISO 14025 and EN 15804.
The LCA results of the different product types are listed at the end of this product catalogue.
The EPD documents can be viewed or downloaded from our homepage **www.aumueller-gmbh.de**.

aumüller

MOUNTING DIMENSION OF RWA1050 FOR SIDE-HUNG INWARD OPENING WINDOWS

hardware set	Frame bracket	Stroke of the opening drive	CASEMENT CLOSED			Mounting dimension „X"	min. FAB (NSK) (side closing edge)	Opening angle	Opening width	CASEMENT OPEN			Weight of the casement (max.)		Required space on the frame		FAH (HSK)
			Angle of the drive force application	Applied force at the drive fixing point						Angle of the drive force application	Applied force at the drive fixing point						
				PL6	PL10						PL6	PL10	PL6	PL10	Hinge	NSK	
			[DEG]	[N]	[N]	[mm]	[mm]	[DEG]	[mm]	[DEG]	[N]	[N]	[Kg]	[Kg]	[mm]	[mm]	[mm]
RWA 1050 (*1	K97	100	19	167	279	0	510	35	(*2	16	163	272	90	130	10	20	500 – 1500
		150	13	139	232	20	600	55		11	112	187	90	130	30	20	
		200	11	119	198	40	680	75		6	60	100	90	130	50	20	
		250	10	103	172	80	740	85		6	60	100	90	130	90	20	

(*1 For the tandem sets RWA1100TE the drive forces and the max. window weigths will be correspondingly higher.
(*2 Depends on FAB

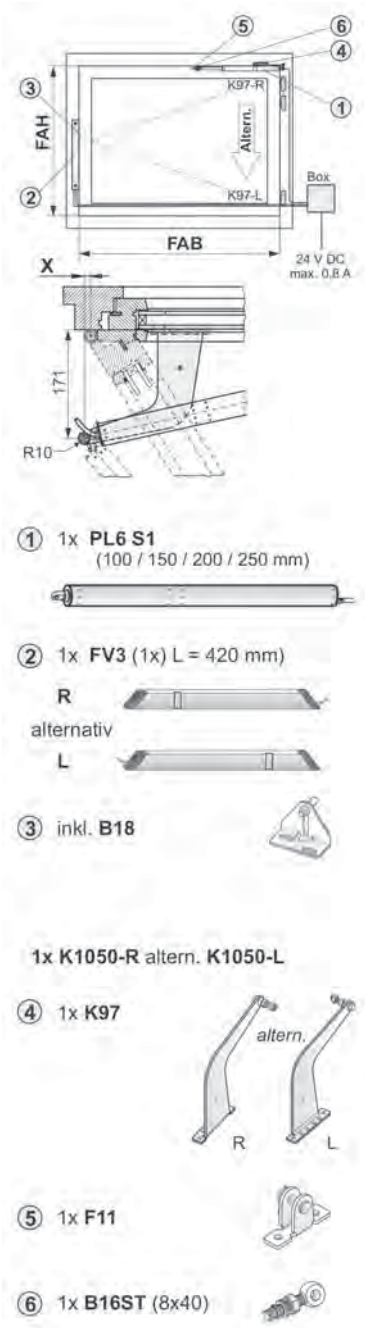

ORDER DATA

	Part.-No.			
Components				
1x PL6 S1				
PL6-100 (FAB min. 510 mm)	**562010**			
PL6-150 (FAB min. 600 mm)	**562015**			
PL6-200 (FAB min. 680 mm)	**562020**			
PL6-250 (FAB min. 740 mm)	**562025**			
1x FV3-R L= 420 mm				
FV3-R (1x) (FAB min. 450 mm)	**515102**			
1x Frame bracket set				
K1050-R Set	**307051**			
Alternativ 1x				
K1050-L Set	**307050**			
Special model				
Set painted / powder coated in other RAL colours	**516022**			
Optional accessories				
B22 base plate for B18 glazing bead	**301599**			

Installation requirements	
Opening direction	inward
Drive lenght (eye bolt – eye bolt)	280 ± 7 mm + Stroke
Required mounting space FV (on the window frame profile)	min. 38 mm
Required mounting space PL (on the window frame profile)	min. 20 mm
Weight of the casement	max. 30 kg/m²
Width of the casement (FAB)	450 – 1300 mm
Min. height of the casement (FAH)	see mounting dimensions
Rated voltage	24V DC, 2 Vpp
Cut-off current	0,8 A
Rated power	15 W

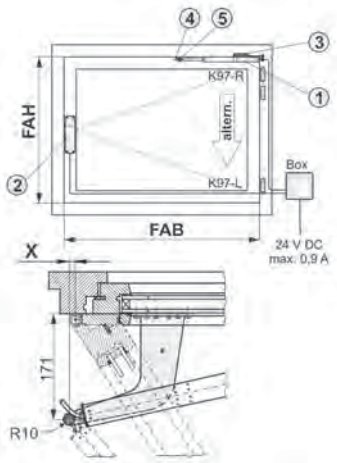

① 1x **PL6 S1**
(100 / 150 / 200 / 250 mm)

② 1x **OFV1**

1x K1050-R altern. **K1050-L**

③ 1x **K97**

④ 1x **F11**

⑤ 1x **B16ST** (8x40)

ORDER DATA

	Part.-No.			
Components				
1x PL6 S1				
PL6-100 (FAB min. 510 mm)	**562010**			
PL6-150 (FAB min. 600 mm)	**562015**			
PL6-200 (FAB min. 680 mm)	**562020**			
PL6-250 (FAB min. 740 mm)	**562025**			
1x OFV1				
OFV1 (FAH min. 450 mm)	**513850**			
1x Frame bracket set				
K1050-R Set	**307051**			
Alternativ 1x				
K1050-L Set	**307050**			
Special model				
Set painted / powder coated in other RAL colours	**516022**			
Optional accessories				
B22 base plate for B18 glazing bead	**301599**			

Installation requirements	
Opening direction	inward
Drive lenght (eye bolt – eye bolt)	280 ± 7 mm + Stroke
Required mounting space OFV (on the casemnet profile)	min. 40 mm
Required mounting space PL (on the window frame profile)	min. 20 mm
Weight of the casement	max. 30 kg/m²
Width of the casement (FAB)	1200 – 2500 mm
Min. height of the casement (FAH)	see mounting dimensions
Rated voltage	24V DC, 2 Vpp
Cut-off current	1,6 A
Rated power	30 W

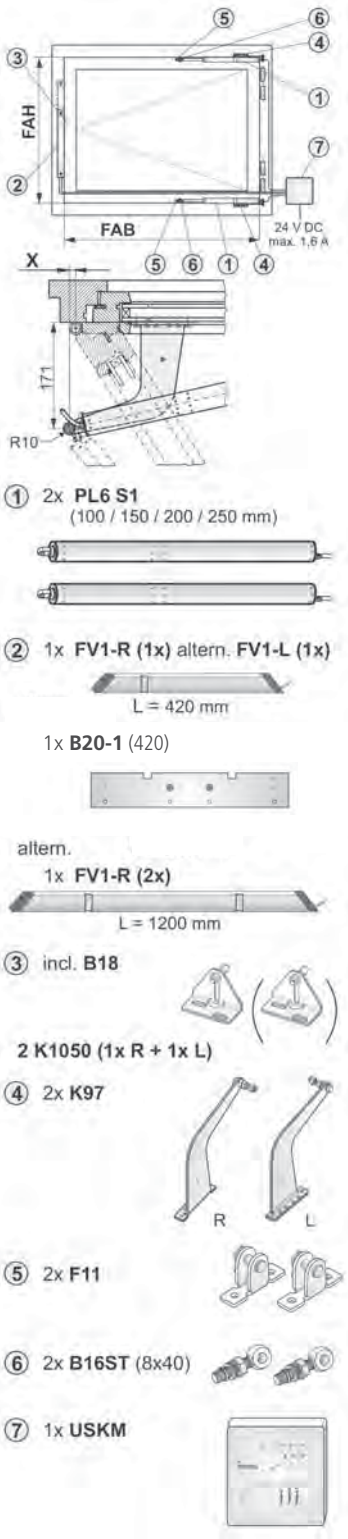

ORDER DATA

	Part.-No.
Components	
2x PL6 S1 (price per drive)	
PL6-100 (FAB min. 510 mm)	**562010**
PL6-150 (FAB min. 600 mm)	**562015**
PL6-200 (FAB min. 680 mm)	**562020**
PL6-250 (FAB min. 740 mm)	**562025**
1x FV1-R L= 420 mm	
FV1-R (1x) (FAB min. 450 mm)	**515103**
1x Mounting plate	
B21-1 base plate FV L = 420; FU>10 mm	**515181**
B21-2 base plate FV L = 1200; FU>10 mm	**515183**
2x Frame bracket set	
K1050-R Set	**307051**
K1050-L Set	**307050**
1x Control module	
USKM	**512140**
Optional accessories	
B22 base plate for B18 glazing bead	**301599**

Installation requirements	
Opening direction	inward
Drive lenght (eye bolt – eye bolt)	280 ± 7 mm + Stroke
Required mounting space FV (on the window frame profile)	min. 38 mm
Required mounting space PL (on the window frame profile)	min. 20 mm
Weight of the casement	max. 30 kg/m²
Width of the casement (FAB)	450 – 1300 mm
Min. height of the casement (FAH)	see mounting dimensions
Rated voltage	24V DC, 2 Vpp
Cut-off current	0,8 A
Rated power	15 W

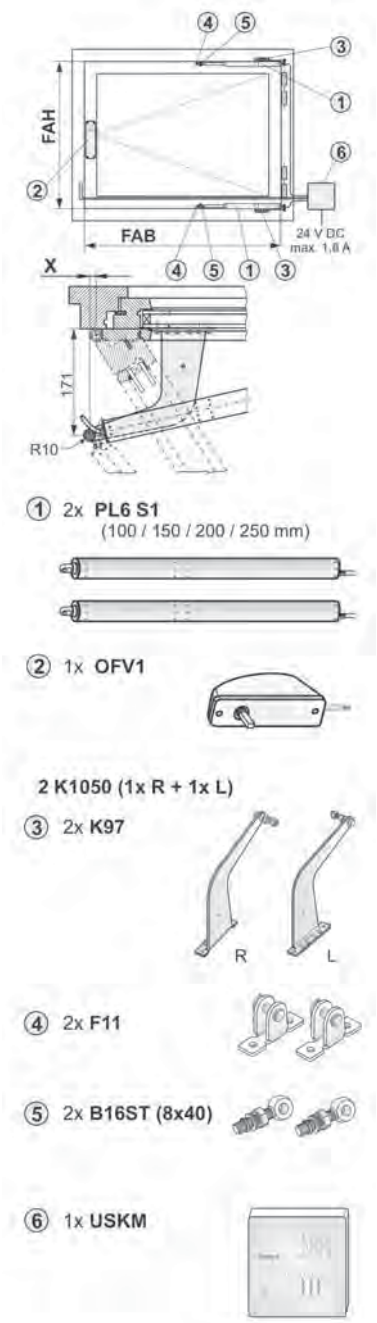

ORDER DATA

	Part.-No.			
Components				
2x PL6 S1 (price per drive)				
PL6-100 (FAB min. 510 mm)	**562010**			
PL6-150 (FAB min. 600 mm)	**562015**			
PL6-200 (FAB min. 680 mm)	**562020**			
PL6-250 (FAB min. 740 mm)	**562025**			
1x OFV1				
OFV1 (FAH min. 450 mm)	**513850**			
2x Frame bracket set				
K1050-R Set	**307051**			
K1050-L Set	**307050**			
1x Control module				
USKM	**512140**			
Optional accessories				
B22 base plate for B18 glazing bead	**301599**			

Installation requirements	
Opening direction	inward
Drive lenght (eye bolt – eye bolt)	280 ± 7 mm + Stroke
Required mounting space OFV (on the casemnet profile)	min. 40 mm
Required mounting space PL (on the window frame profile)	min. 20 mm
Weight of the casement	max. 30 kg/m²
Width of the casement (FAB)	1200 – 2500 mm
Min. height of the casement (FAH)	see mounting dimensions
Rated voltage	24V DC, 2 Vpp
Cut-off current	1,6 A
Rated power	30 W

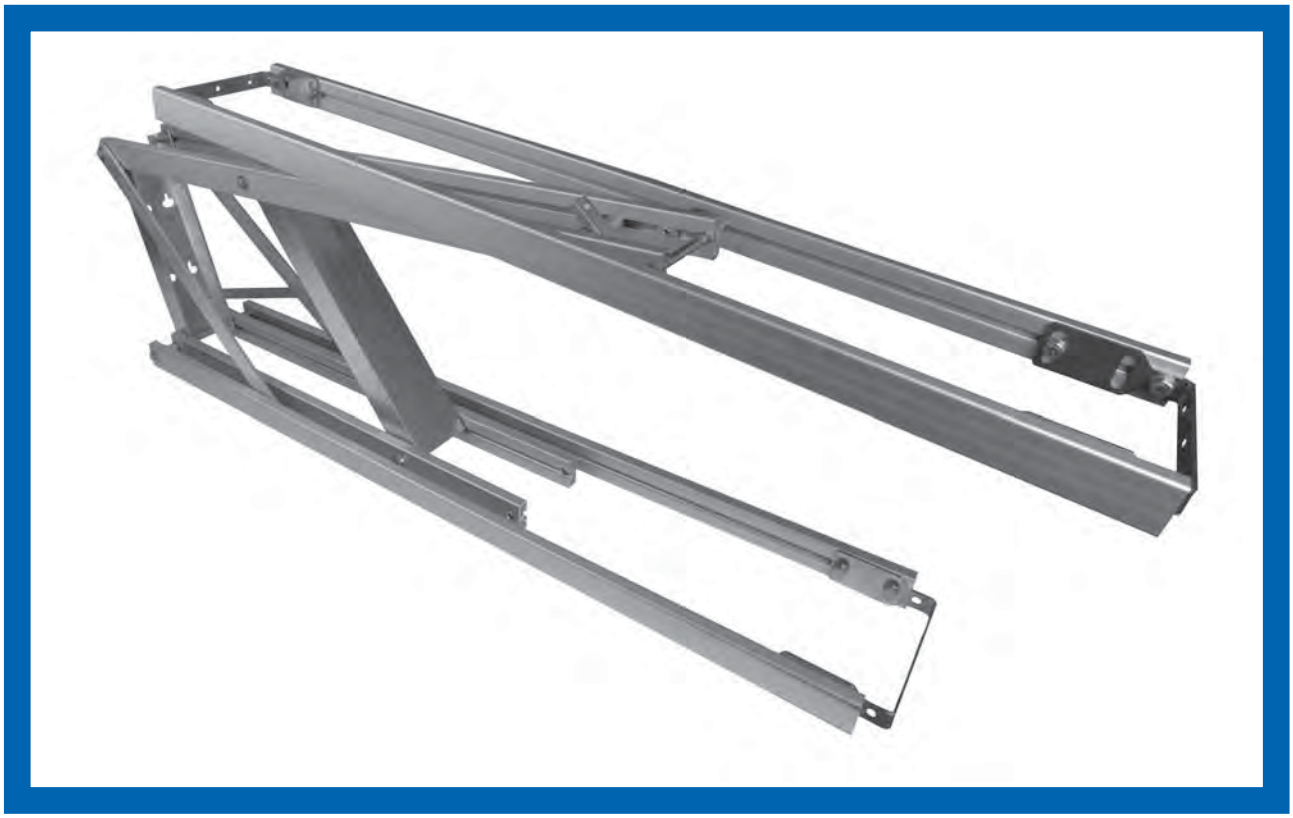

SPECIAL FEATURES

- For natural ventilation, smoke and heat exhausting and ferralux® NSHEV (EN12101-2)
- Use for skylights type Eternit Fumilux4000
- Opening angle app. 160°
- Use for other skylights on request

TECHNICAL DATA		PLA16-400 S12 A	PLS30-400 S3 A
U_N	Rated voltage	24V DC (± 20%), max. 2 Vpp	24V DC (± 20%), max. 2 Vpp
I_N	Rated current	1,85 A	3,75 A
I_A	Cut-off current	2,5 A	5,0 A (10 A/10 ms)
P_N	Rated power	45 W	90 W
ED	Duty cycle	30 % (ON: 2 min. / OFF: 8 min.)	30 % (ON: 2 min. / OFF: 8 min.)
	Protection rating	IP 65	IP 54
	Ambient temperature range	-5 °C ... + 75 °C	-5 °C ... + 75 °C
F	Pulling / Pushing force	1600 N	3000 N
F_H	Pullout force	5000 N	25000 N
	Connecting cable	non-halogen 3 x 1,0 mm², ~ 5 m	non-halogen 3 x 1,0 mm², ~ 5 m
t	Opening time	< 60 s	< 60 s

For this product series, a Type III Environmental Product Declaration (EPD) was issued according to ISO 14025 and EN 15804.
The LCA results of the different product types are listed at the end of this product catalogue.
The EPD documents can be viewed or downloaded from our homepage **www.aumueller-gmbh.de**.

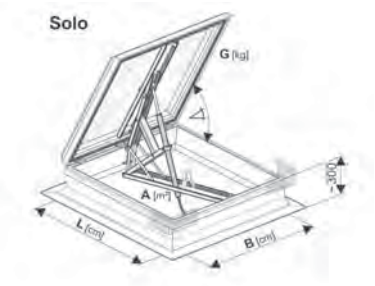

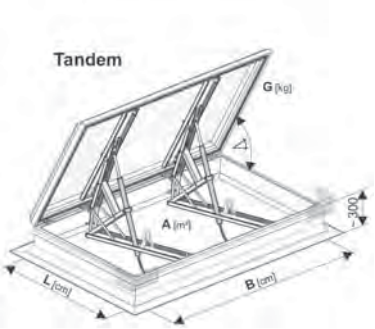

ORDER DATA

		Part.-No.			
Components					
Hardware w/o drives (price per piece)					
L = 100 cm Solo	B < 120 cm	**1 x 578080**			
L = 100 cm Tandem	B < 250 cm	**2 x 578080**			
L = 120 cm Solo	B < 120 cm	**1 x 578090**			
L = 120 cm Tandem	B < 250 cm	**2 x 578090**			
L = 125 cm Solo	B < 120 cm	**1 x 578100**			
L = 125 cm Tandem	B < 250 cm	**2 x 578100**			
L = 150 cm Solo	B < 120 cm	**1 x 578110**			
L = 150 cm Tandem	B < 250 cm	**2 x 578110**			
Drives with clamp ring					
PLA16-400 S12 A, s = 360 mm / L = 100 cm		**565742**			
PLA16-500 S12 A, s = 420 mm / L > 100 cm		**565752**			
PLA16-400 S12 A Set Sync2, s = 360 mm / L = 100 cm		**1020565742**			
PLA16-500 S12 A Set Sync2, s = 420 mm / L > 100 cm		**1020565752**			
PLS30-400 S12 A, s = 350 mm / L = 100 cm		**577532**			
PLS30-400 S12 A, s = 420 mm / L > 100 cm		**577542**			
PLS30-400 S12 A Set Sync2, s = 350 mm / L = 100 cm		**1020577532**			
PLS30-400 S12 A Set Sync2, s = 420 mm / L > 100 cm		**1020577542**			

APPLICATIONS ON SKYLIGHT ETERNIT FUMILUX4000

Nominal size of skylight						Drive and max. snow load [N/m²]				with (⇨) w/o (0) Locking
L	B	G	A	A_a w/ Sp. (*1	A_a w/o Sp. (*1	PLA16		PLS30		
[cm]	[cm]	[Kg]	[m²]	[m²]	[m²]	Solo	Tandem	Solo	Tandem	
100	100	16	1,00	0,750	0,650	600	–	1200	–	0
100	150	22	1,50	1,125	0,900	350	–	800	1700	0
100	200	33	2,00	1,500	1,200	–	600	–	1200	0
100	240	42	2,40	1,800	1,440	–	450	–	1000	0
100	250	44	2,50	1,875	1,500	–	400	–	950	0
120	120	21	1,44	1,080	0,864	350	–	800	–	0
120	150	25	1,80	1,350	1,080	250	700	650	1400	0
120	180	34	2,16	1,620	1,296	–	500	–	1100	0
120	240	46	2,88	2,160	1,584	–	–	–	800	0
120	250	55	3,00	2,250	1,650	–	–	–	750	0
125	125	23	1,56	1,170	0,936	300	–	750	–	⇨
125	250	56	3,13	2,348	1,690	–	300	–	700	⇨
150	150	28	2,25	1,688	1,350	–	–	450	1050	⇨
150	180	41	2,70	2,025	1,620	–	–	–	850	⇨
150	210	46	3,15	2,363	1,890	–	–	–	700	⇨
150	240	57	3,60	2,700	1,980	–	–	–	550	⇨
150	250	60	3,75	2,813	2,063	–	–	–	550	⇨

(*1 w/ Sp. = with Spoiler (wind deflectors)
w/o Sp. = without Spoiler (wind deflectors)

MBM || MAB

Bilstrupvej 2
7800 Skive
Danmark

Tel +45 70 20 66 70
info@mbm-mab.dk

www.mbm-mab.dk

BESØG
vores hjemmeside på
mbm-mab.dk